Automotive Crystal Oscillators

Feature

- Ceramic surface mount with Metal Lid
- CMOS compatible logic levels
- Tri-state function available
- Supply voltage range : 1.62V ~ 3.63V(Compatible with 1.8V, 2.5V, 3.3V)
- AEC-Q200 Qualified
- RoHS Compliant / Pb Free

Applications

- Automotive navigation system
- Automotive audio equipment
- Image processing for self-driving
- Automotive Car audio and video entertainment system

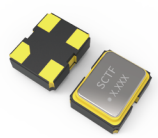

2.0 x 1.6 mm

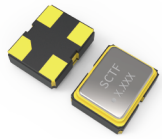

2.5 x 2.0 mm

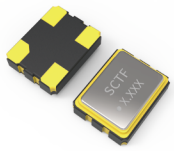

3.2 x 2.5 mm

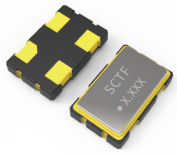

5.0 x 3.2 mm

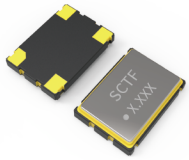

7.0 x 5.0 mm

Electrical Specifications

Item	Symb.	Min.	Typ.	Max.	Unit	Notes
Frequency Range	Freq.	1.000		54.000	MHz	
Operating Temperature	T_use	-40		85	°C	
		-40		105	°C	
		-40		125	°C	
StorageTemperature Range	T_stg	-55		125	°C	
Supply Voltage	Vdd	1.62	1.8/2.5/3.3	3.63	V	
Output Load	L_CMOS		15		pF	
Current Consumption	Icc			10	mA	1MHz ⩽ Freq. ＜ 40MHz
				20		40MHz ⩽ Freq. ⩽ 54MHz
Duty Cycle	SYM	45		55	%	50 % Vdd level, L_CMOS ⩽ 15 pF
Rise / Fall Time	T_R / T_F			5	nS	10% Vdd to 90% Level
Start-up Time	T_str			5	mS	To 90% of Final Amplitude
High output voltage	V_{OH}	0.9Vdd			V	
Low output voltage	V_{OL}			0.1Vdd	V	
Enable Voltage High(Logic 1)	V_{IH}	0.7Vdd			V	Output will be disable if OE is Logic 0 Output will be enable if OE is Logic 1 or open
Enable Voltage Low(Logic 0)	V_{IL}			0.3Vdd	V	
Aging	f_age			3	ppm	1st. Year at 25°C

Frequency Stability & Operating Temperature Range

Temp. \ FT	±25ppm	±30ppm	±50ppm	±100ppm
-40°C to +85°C	△	★	★	★
-40°C to +105°C		△	★	★
-40°C to +125°C			△	★

★: Available △: Conditional

All condition: Include 25°C tolerance, operating temperature range , input voltage change, aging, load change.

Dimensions (UNIT:mm)

A1C Series (2.0 x 1.6 mm SMD Crystal Oscillator)

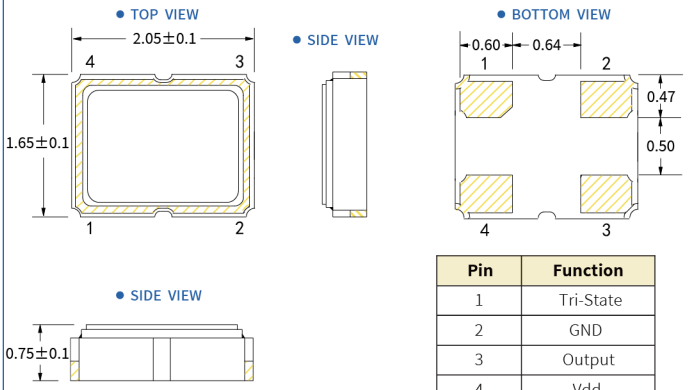

Pin	Function
1	Tri-State
2	GND
3	Output
4	Vdd

Solder pad layout (UNIT:mm)

A1C Series (2.0 x 1.6 mm SMD Crystal Oscillator)

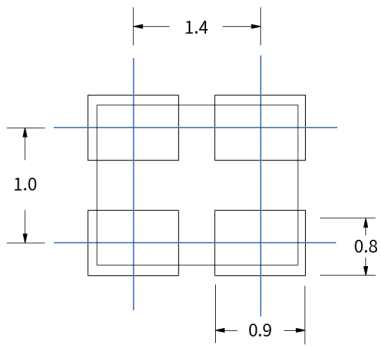

Automotive Crystal Oscillators

A2C Series（2.5 x 2.0 mm SMD Crystal Oscillator）

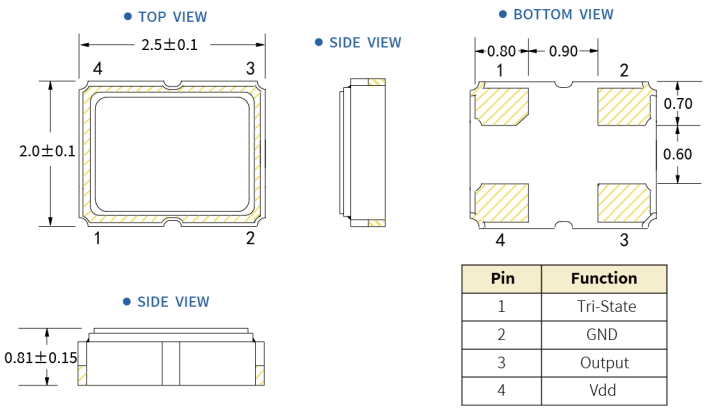

Pin	Function
1	Tri-State
2	GND
3	Output
4	Vdd

A2C Series（2.5 x 2.0 mm SMD Crystal Oscillator）

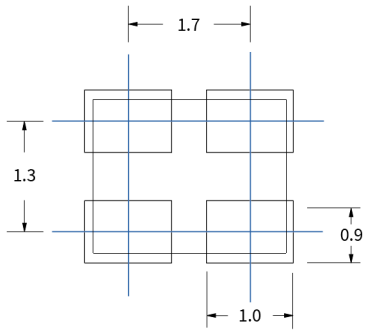

A3C Series（3.2 x 2.5 mm SMD Crystal Oscillator）

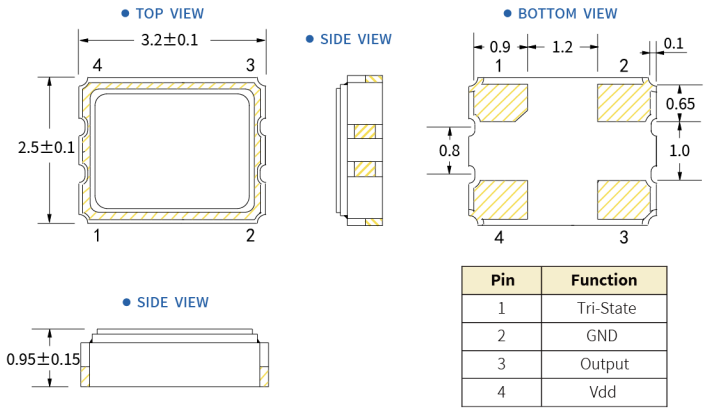

Pin	Function
1	Tri-State
2	GND
3	Output
4	Vdd

A3C Series（3.2 x 2.5 mm SMD Crystal Oscillator）

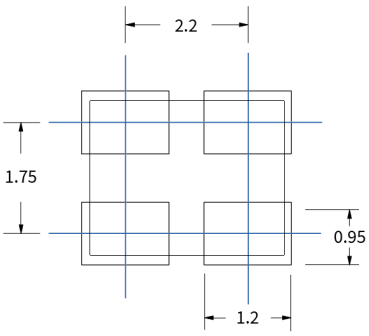

A5C Series（5.0 x 3.2 mm SMD Crystal Oscillator）

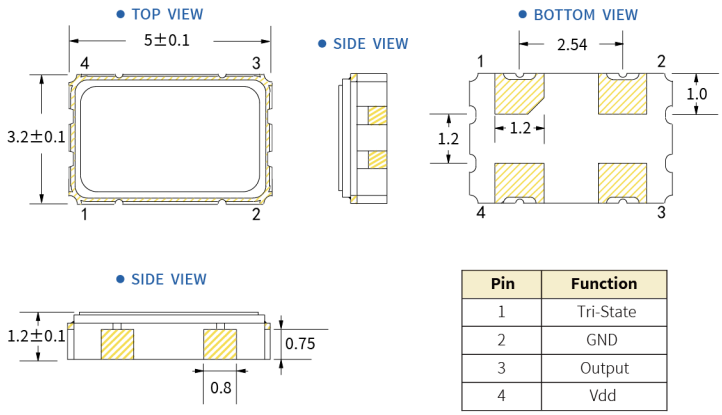

Pin	Function
1	Tri-State
2	GND
3	Output
4	Vdd

A5C Series（5.0 x 3.2 mm SMD Crystal Oscillator）

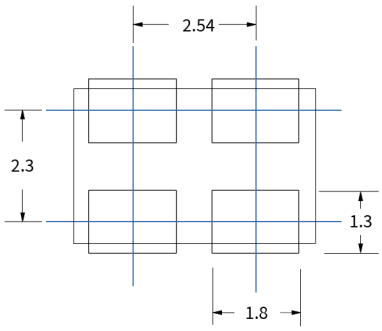

A7C Series（7.0 x 5.0 mm SMD Crystal Oscillator）

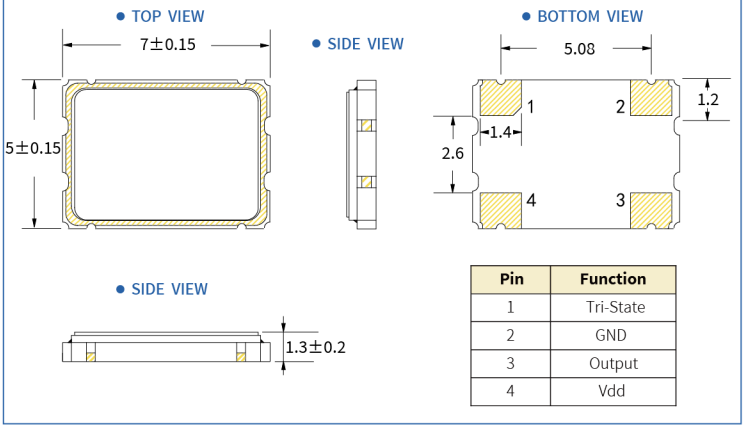

Pin	Function
1	Tri-State
2	GND
3	Output
4	Vdd
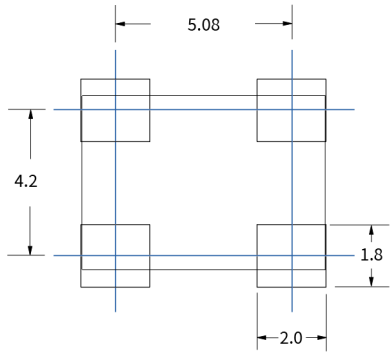
A7C Series（7.0 x 5.0 mm SMD Crystal Oscillator）